	Scotch Student ID #			
Circle the relevant digits	0	0	0	0
	1	1	1	1
	2	2	2	2
	3	3	3	3
	4	4	4	4
	5	5	5	5
	6	6	6	6
	7	7	7	7
	8	8	8	8
	9	9	9	9

Teacher's Name

Scotch College

CHEMISTRY

SAC 1 – FUELS, GASES & THERMOCHEMISTRY

Date: Monday, March 15th 2021

Reading Time	0 minutes
Writing Time	45 minutes

Task Sections	Marks	Your Marks
Total Marks	40	

General Instructions

- Write your student number in the space provided above on this page.
- Please complete all questions in the spaces provided.

Allowed Materials

- A VCAA Chemistry Data Book has been provided.
- Students are permitted to bring into the SAC: pens, pencils, highlighters, erasers, sharpeners, rulers and one scientific calculator.

At the end of the task…

- Please ensure your student number has been filled in at the top of the page and that you have written your teacher's name.

Electronic Devices

Students are **not** allowed to have a mobile phone, smart watch and/or any other unauthorised electronic device in the SAC, unless it is TURNED OFF and is placed on the front teacher desk.

Q1. *[1 mark]*

Questions 1 and 2 are about an experiment to measure the molar heat of combustion of ethanol, using the apparatus and setup shown.

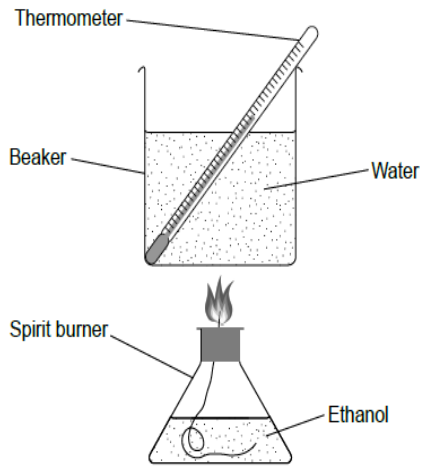

Item	**Measurement**
Maximum temperature of	30°C
Initial temperature of water	20°C
Mass of water in beaker	100.0 g
Loss in mass of ethanol	0.230 g
M_r (ethanol)	46.0

What is the molar heat of combustion of ethanol in kJ mol^{-1}?

A. $\frac{100.0\times4.18\times(10.0\times273)}{\frac{0.230}{46.0}\times1000}$

B. $\frac{0.0230\times4.18\times10.0}{\frac{100.0}{46.0}\times1000}$

C. $\frac{100.0\times4.18\times10.0}{\frac{0.230}{46.0}\times1000}$

D. $\frac{100.0\times4.18\times10.0}{\frac{0.230}{46.0}}$

Q2. *[1 mark]*

NOT validity

Which quantity is likely to have the largest uncertainty in this experiment?

all ±0.0005

A. Mass of ethanol burnt

B. Molecular mass of ethanol

C. Mass of water

D. Temperature change

$\frac{1}{2}$ the smallest graduation.

Q3. *[1 mark]*

Which is correct when $Ba(OH)_2$ reacts with NH_4Cl?

$Ba(OH)_2$ (s) + $2NH_4Cl$ (s) → $BaCl_2$ (aq) + $2NH_3$ (g) + $2H_2O$ (l) $\Delta H = +164$ kJ mol^{-1}

	Temperature	Enthalpy	Stability
A.	Increases	Products have lower enthalpy than the reactants	Products are less stable than the reactants
B.	Decreases	Products have lower enthalpy than the reactants	Products are more stable than the reactants
C.	Decreases	Products have higher enthalpy than the reactants	Products are less stable than the reactants
D.	increases	Products have higher enthalpy than the reactants	Products are more stable than the reactants

Q4. *[1 mark]*

The composition of biogas varies with the source and conditions. The table below shows the typical ranges of the three main constituents.

Compound	% volume
methane	50-75
carbon dioxide	25-50
nitrogen	0-10

A 49.6 L sample of biogas at SLC is found to release 1300 kJ of energy.

Assuming the energy is all coming from the methane, the % methane by volume is closest to

A. 59%

B. 64%

C. 73%

D. 80%

genuinely difficult.

Q5. *[1 mark]*

Which statement is correct given the enthalpy level diagram below?

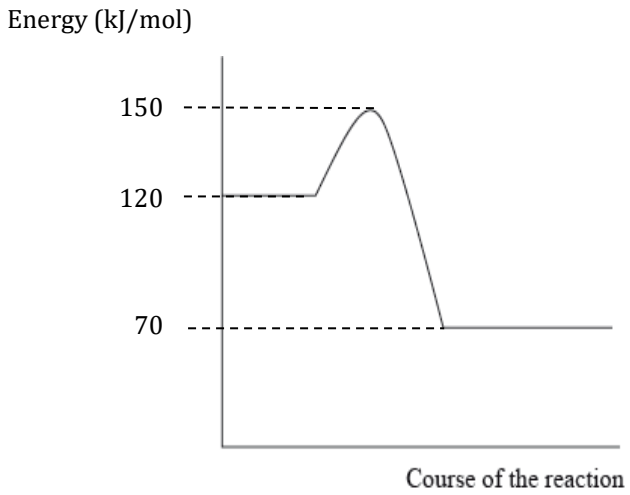

A. The forward reaction is endothermic and the ΔH of the forward reaction is +120 kJ/mol.

B. The forward reaction is endothermic and the ΔH of the forward reaction is -30 kJ/mol.

C. The forward reaction is exothermic and ΔH of the forward reaction is +50 kJ/mol.

D. The reverse reaction is endothermic and ΔH of the reverse reaction is +50 kJ/mol.

Q6. *[7 marks]*

a. To determine the enthalpy change of combustion of methanol, CH_3OH (M_r = 32.0 g/mol) 0.230 g of methanol was combusted in a spirit burner. The heat released increased the temperature of 50.0 g of water from 24.5 °C to 35.8 °C.

Using only the data above, calculate the enthalpy change for the combustion of methanol and write a thermochemical equation. *[4 marks]*

(1) $CH_3OH_{(l)} + \frac{3}{2}O_{2(g)} \rightarrow CO_{2(g)} + 2H_2O_{(l)}$ $\Delta H = -329$ kJ/mol (1)

(1) $q = mc\Delta T = 50 \times 4.18 \times (35.8 - 24.5)$
$= 2.36$ kJ

(1) $n(CH_3OH) = \frac{0.230}{32} = 7.18 \times 10^{-3}$

b. Using the theoretical value in the Data Booklet, discuss the experimental results, including **TWO** practical modifications to the experimental setup that could be made to give an experimental value that more closely matches the literature value. *[3 marks]*

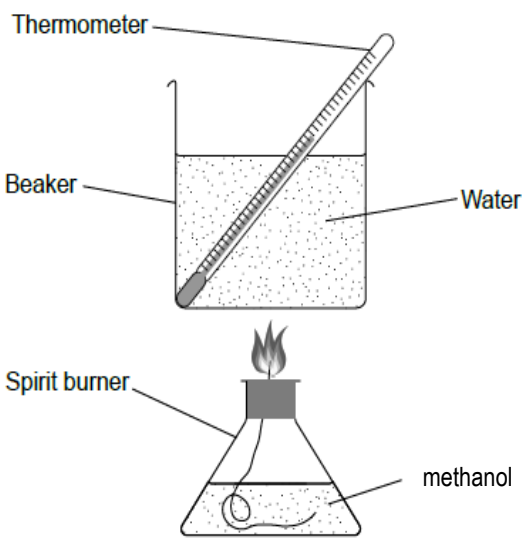

(1) −726 kJ/mol data book

Two Reasons (specific)

(1) better-conducting calorimeter eg Cu can not beaker

(1) Use a wind-shield as a lid

OR · Decrease distance b/w flame & calorimeter

NOT – Repetition, "Reduce heat loss", use a better thermometer/temp. probe.

Q7. *[8 marks]*

Ethanol is used as a component in fuel for some vehicles. One fuel mixture contains 10% by mass of ethanol in unleaded petrol (gasoline). This mixture is often referred to as Gasohol E10.

Assume that the other 90% by mass of Gasohol E10 is octane. 1.00 kg of this fuel mixture was burned.

$$CH_3CH_2OH(l) + 3O_2(g) \rightarrow 2CO_2(g) + 3H_2O(l) \quad \Delta H = -1367 \text{ kJ mol}^{-1}$$
$$C_8H_{18}(l) + 12\frac{1}{2}O_2(g) \rightarrow 8CO_2(g) + 9H_2O(l) \quad \Delta H = -5470 \text{ kJ mol}^{-1}$$

a. Calculate the volume of oxygen gas required for the complete combustion of 2.00 mol of ethanol at 60 °C and 250 kPa. *[2 marks]*

(1) $n_{O_2} = 3n_{ethanol} = 6.00$ mol

(1) $V = \frac{nRT}{P} = \frac{6 \times 8.31 \times (60+273)}{250} = 66.4$ L O_2.

b. Calculate the amount, in mol, of ethanol and octane in 1.00 kg of the fuel mixture. *[1 mark]*

mass of ethanol = 0.1 × 1.00 kg = 100 g

mass octane = 1.00 − 0.1 = 0.9 kg

$n_{ethanol} = \frac{100}{46} = 2.17$ mol

$n_{octane} = \frac{900}{114} = 7.88$ mol

c. Calculate the total amount of energy, in kJ, released when 1.00 kg of the fuel mixture is completely burned. *[3 marks]*

energy from Ethanol = 2.17 × 3167 = 2966 kJ (1)

Petrol = 43104 kJ (1)

4.61×10^4 kJ (1)

d. If the fuel blend was vaporized before combustion, predict whether the amount of energy released would be greater, less or the same. Explain your answer. *[2 marks]*

- (l) → (g) is endothermic.
- so, if already a gas, then more energy available to be released.

Q8 *[6 marks]*

a. Crude oil can be fractionally distilled to produce many useful fuels and other chemicals.

Name **two** fuels that are obtained from crude oil. *[1 mark]*

petrol, diesel, kerosene, aviation fuel.

b. One other fossil fuel is Natural Gas. It is composed of 90.0% methane and 10.0% ethane by volume. Calculate the volume of CO_2 that will be produced at 400 °C and 130 kPa from the complete combustion of a 1.00 L sample of natural gas under the same conditions of temperature and pressure. *[3 marks]* * Sig figs

(1) 1 CH_4 → 1 mol CO_2
1 C_2H_6 → 2 mol CO_2

(1) Same conditions of T&P and all gases ∴ 0.900 + 2×0.100 = 1.10 L

3 S.F.

c. Biofuels are often proposed as a better alternative to the use of fossil fuels. Explain **one** negative environmental impact of the production and/or use of biofuels. *[2 marks]*

• Crops need to be grown for biomass to make biofuels.
• This land (+ the water) for crops is ∴ unavailable for food crops.
• Land is degraded by constant planting of same crop.

Q9 *[7 marks]*

a. A student set up an experiment to determine the heat of neutralization of an acid. The calorimeter set up is shown below.

Calorimeter set-up

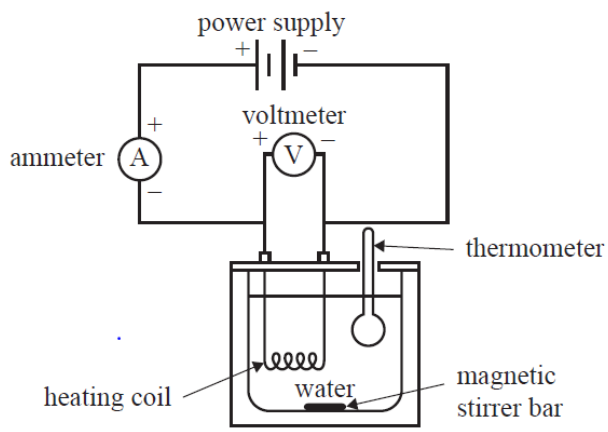

glaring error in sem 2 Q.

Determine the calibration factor for the calorimeter if a voltage of 5.60 V and a current of 1.35 A raised the temperature of the calorimeter containing 100 mL of water by 3.34 °C in 120 s. *[2 marks]*

$CF = \frac{VIt}{\Delta T}$

$= \frac{5.60 \times 1.35 \times 120}{3.34}$

$= 271.6\ J/°C$

UNITS Q. ①

①

b. The same calorimeter as in part **a** was used for the following experiment. 50 mL of 1.50 M HCl was reacted with 75 mL of 1.00 M NaOH and the temperature increased from 18.5 °C to 28.0 °C. Calculate the change in enthalpy, ΔH, for the neutralization of hydrochloric acid. *[3 marks]*

75+50 = 125 mL ← glaring error.

$HCl\ (aq) + NaOH\ (aq) \rightarrow NaOH\ (aq) + H_2O\ (l)$

(1) checking $n_{HCl} = n_{NaOH} = 0.075$ mol

(1) CF × ΔT = 34.5 kJ/mol

(1) ΔH = −34.5 kJ/mol

c. The literature value for the heat of neutralization of hydrochloric acid is ΔH = -57 kJ/mol.

Discuss any errors or assumptions that the student made during this experiment that may have caused the results to be different to the literature value. *[2 marks]*

(1) CF is clearly wrong as CF for 100 mL of water cannot be less than 420 J/°C. (1)

or vol. of water during calibration is different to vol. of water in exp ∴ CF is irrelevant (2)

or for ½ pity mark – incomplete rxn of HCl/NaOH.
½ pity mark – in 120s!

* Many students did not realise that the CF takes into account – heat loss – poor insulation – bad wiring etc

Q10 *[7 marks]*

a. Vegetable oils, such as that shown, require conversion to biodiesel for use in current internal combustion engines. [2 marks]

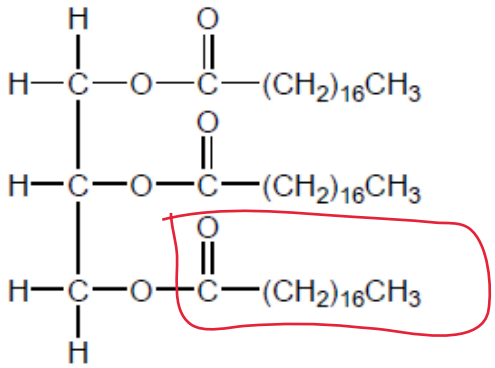

State **two** chemical reagents <u>required</u> to convert vegetable oil to biodiesel.

* OH^- / KOH / NaOH (H^+ ok but OH^- better)
* methanol (or ethanol).

b. Write the formula of the biodiesel formed when the vegetable oil shown is reacted with the reagents in (a). *[1 mark]*

$CH_3O-\overset{O}{\overset{\|}{C}}-(CH_2)_{16}CH_3$

c. Explain, in terms of the molecular structure, the critical differences in properties between biodiesel and petrodiesel. *[4 marks]*

(1) both are largely hydrocarbons / non-polar ∴ both have dispersion forces

(1) only biodiesel has a polar ester gp ∴ can dipole-dipole bond (as well as disp. forces)

(1) the stronger interbonding in biodiesel means that bio-d is more viscous than petrodiesel

(1) other property – hygroscopic b/c –C– can H-bond w/ water. !! spelling

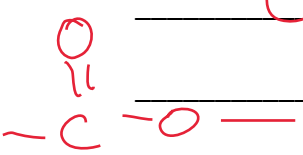

End of SAC